ESP32-S3 Mini Development Board

- ## Overview :

This project presents the design of a compact custom development board built around the ESP32-S3-MINI-1 wireless microcontroller module. The board was designed using KiCad and includes USB power input, voltage regulation, user push buttons, and indicator LEDs.

The objective of this project was to practice complete PCB design workflow, including schematic capture, component selection, PCB layout, design rule checking, and 3D visualization.

This board can be used as a small IoT prototyping platform because the ESP32-S3 supports Wi-Fi and Bluetooth connectivity.

- ## Microcontroller:

Microcontroller

- ESP32-S3-MINI-1
- Integrated Wi-Fi and Bluetooth
- Multiple GPIO pins for external peripherals

Power System

- USB Micro-B input
- Voltage regulation using TLV75801PDRV LDO regulator
- Decoupling capacitors for stable power delivery

Protection Circuit

- ESD protection using D3V3XA4B1DLP

User Interface

- Two push buttons for user input or reset functionality
- Status LED for debugging or power indication

- ## Schematic Design:

The schematic was developed using **KiCad** and represents the complete electrical architecture of the board. The design integrates the power supply, microcontroller

module, user interface components, and protection circuitry into a single compact system.

The central component of the design is the ESP32-S3-MINI-1 wireless microcontroller module. This module provides integrated Wi-Fi and Bluetooth capabilities, making it suitable for IoT and embedded system applications. The schematic connects the ESP32 module with the required supporting circuits to ensure stable operation and reliable communication.

The power section of the schematic begins with a USB Micro-B connector which provides external power to the board. Since USB ports can be vulnerable to electrostatic discharge events, an ESD protection device (D3V3XA4B1DLP) is placed near the USB interface to protect the circuit from voltage spikes. This ensures the safety of the microcontroller and other sensitive components.

After the USB input, the voltage is regulated using a low-dropout voltage regulator (TLV75801PDRV). This regulator converts the incoming voltage into a stable supply voltage suitable for the ESP32 module. Proper decoupling capacitors are placed around the regulator and the microcontroller power pins to reduce noise and maintain stable power delivery.

The design also includes push-button switches connected to the microcontroller's GPIO pins. These buttons can be used for user interaction such as reset functionality, boot mode control, or triggering custom application events. Pull-up resistors and capacitors are included to ensure proper logic levels and stable signal transitions.

An LED indicator is added to the circuit to provide visual feedback. This LED can be used as a power indicator or programmed as a status indicator during debugging or application execution.

The schematic is organized in logical sections including:

- USB interface and protection circuit
- Power regulation stage
- ESP32 microcontroller module connections
- Input components such as push buttons
- Output indicators such as LEDs

This structured design approach makes the schematic easier to understand, maintain, and modify in future revisions.

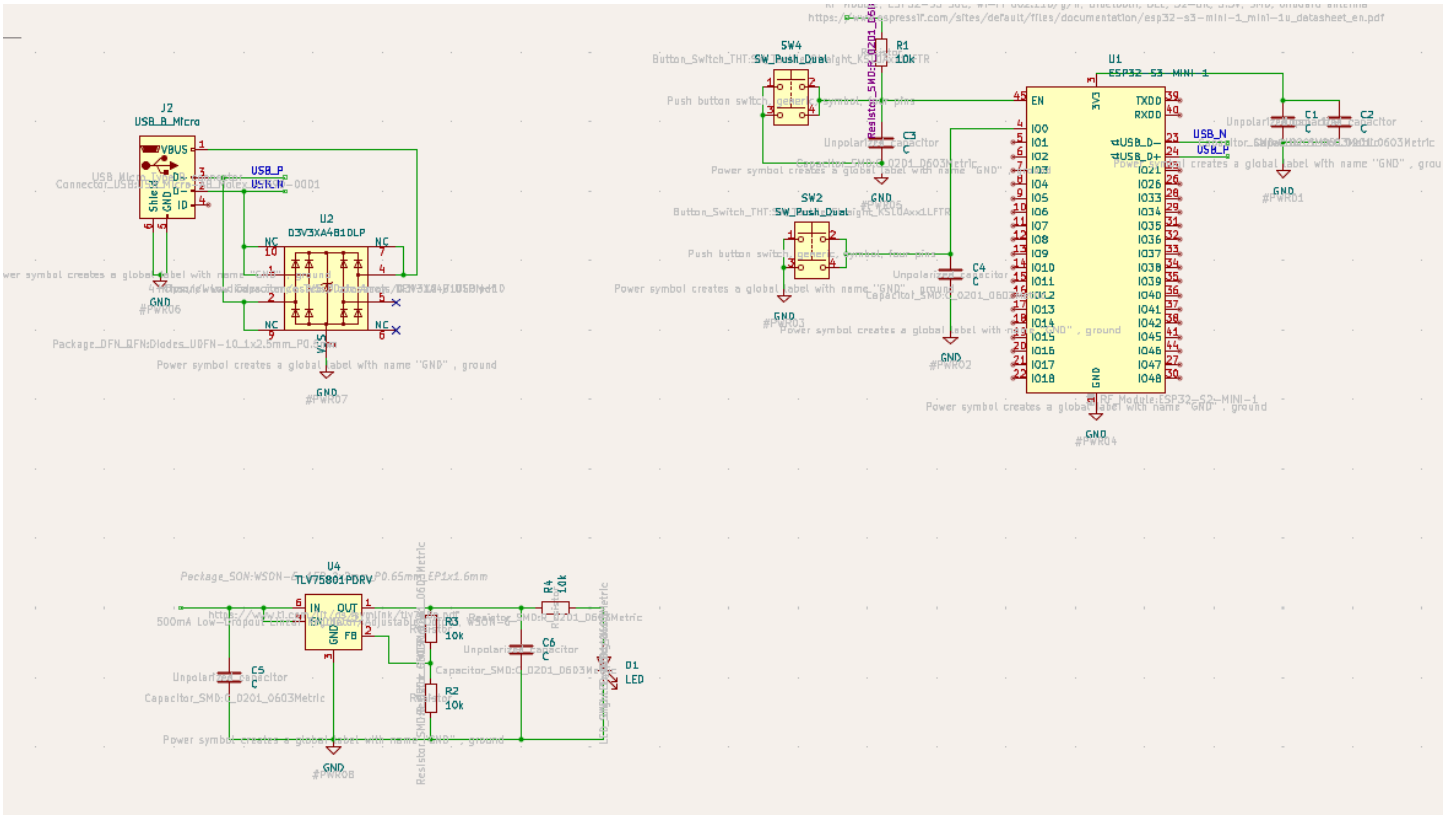

- **PCB Layout:**

The PCB layout was created using the PCB editor in **KiCad**, translating the schematic design into a physical circuit board ready for manufacturing. The layout focuses on achieving compact dimensions while maintaining good electrical performance and reliable routing.

The **ESP32-S3-MINI-1** module is placed near the top of the board to allow the integrated antenna to function properly. A dedicated antenna keep-out area is maintained above the module to prevent copper traces or ground planes from interfering with RF signal transmission. Maintaining this clearance is essential for good wireless performance.

The USB connector is positioned at the bottom edge of the board to allow easy external connection. From the USB port, the power traces are routed toward the voltage regulator and then distributed to the rest of the circuit. Power traces are designed with sufficient width to handle the expected current while minimizing voltage drop.

The voltage regulator and its associated capacitors are placed close together to minimize noise and ensure stable power regulation. Proper placement of decoupling

capacitors near the microcontroller power pins helps reduce electromagnetic interference and improves signal integrity.

The push buttons are positioned in an accessible location on the board to allow easy user interaction. Their placement also ensures that routing to the microcontroller GPIO pins remains simple and avoids unnecessary crossing of traces.

The routing strategy used in this PCB design includes:

- Short signal paths to reduce noise
- Proper spacing between traces according to design rule constraints
- Clear separation between power and signal routing
- Careful consideration of antenna clearance for RF performance

Design Rule Checks (DRC) were performed to ensure the board complies with standard PCB manufacturing constraints such as minimum trace width, clearance, and via sizes.

Overall, the PCB layout balances compact design with good electrical practices to create a functional and manufacturable board.

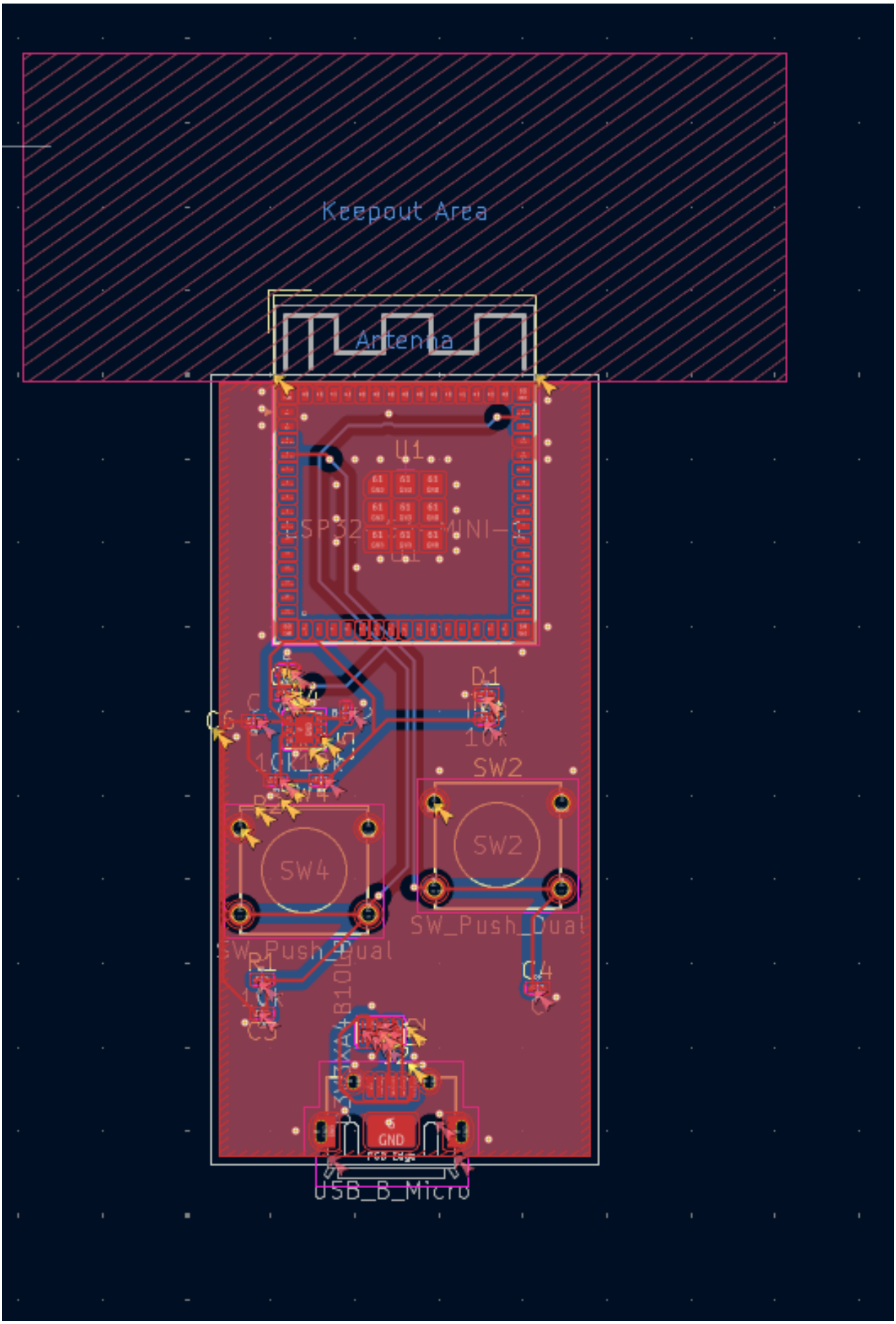

- **3D PCB Visualization:**

To verify the mechanical layout and component placement, a 3D model of the PCB was generated using the built-in 3D viewer in **KiCad**.

The 3D visualization provides a realistic representation of the final assembled board, including the placement of the **ESP32-S3-MINI-1** module, push buttons, USB connector, and passive components. This visualization helps confirm that all components are positioned correctly and that there are no mechanical conflicts between parts.

Using the 3D viewer also allows verification of the overall board shape, component heights, and connector orientations before sending the design for manufacturing. This step is especially useful for detecting issues that may not be obvious in the 2D layout view.

The 3D view shows:

- The ESP32 module mounted on the PCB
- Push-button switches positioned for user interaction
- The USB connector located at the board edge for external connection
- Passive components such as resistors and capacitors placed around the board
- The antenna clearance region ensuring proper wireless performance

By inspecting the board in 3D, it is possible to validate both the electrical and mechanical aspects of the design, reducing the likelihood of errors during fabrication and assembly.

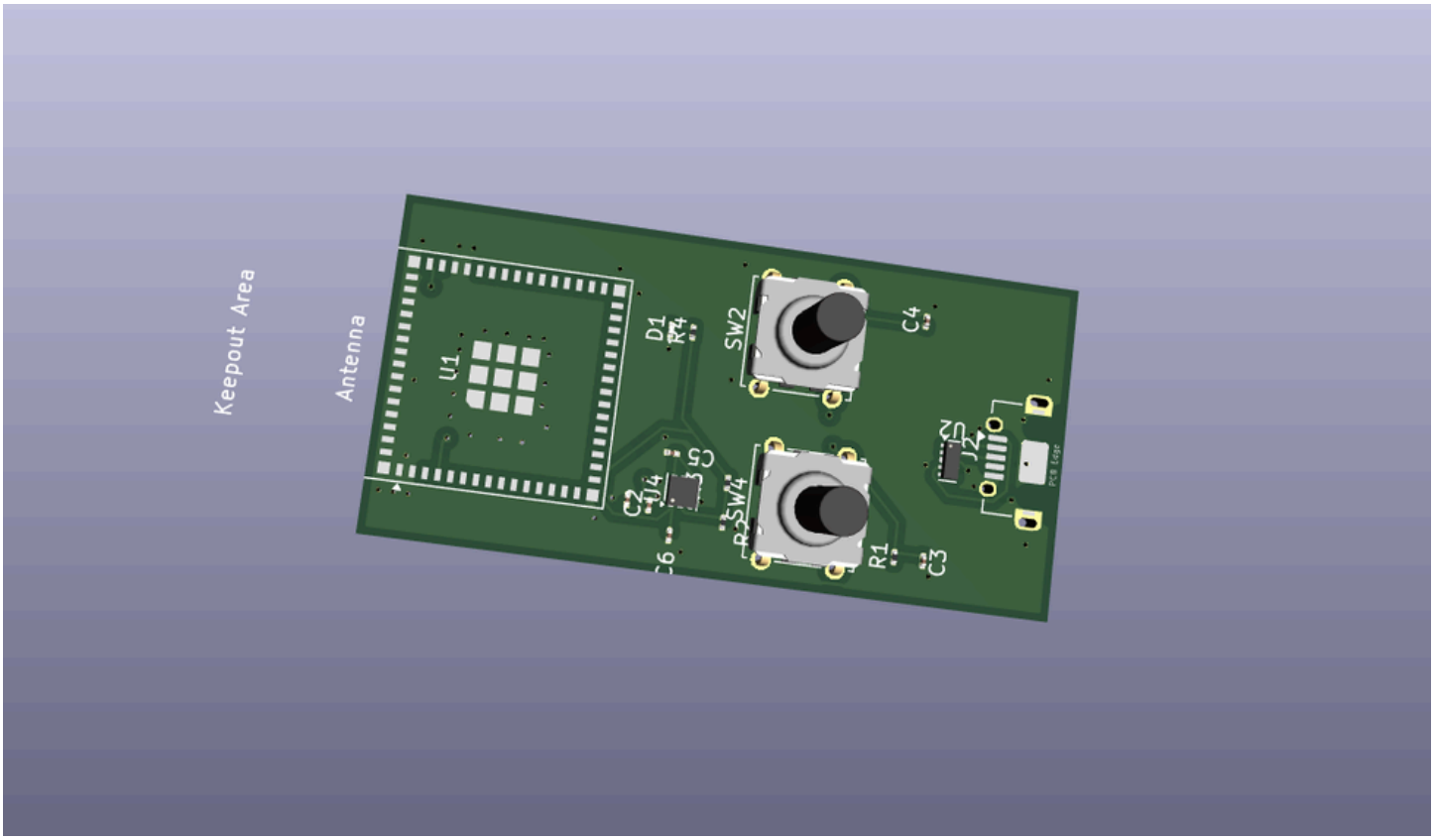

- **Skills Demonstrated:**

This project demonstrates several hardware design skills:

1. PCB schematic design
2. Microcontroller hardware integration
3. Power supply design
4. USB interface implementation
5. RF design considerations (antenna keep-out)
6. PCB routing and layout optimization
7. Design rule checking

- **Future Improvements:**

Possible improvements to this board include:

- Adding a USB-to-UART programming interface
- Battery charging circuit
- Additional GPIO headers for peripherals
- On-board sensors for IoT applications